HANKIN

VIETNAM

FREESTANDING BATHTUB

TECHNICAL DRAWING / 1700 x 850 x 580 mm

A4

REV 01

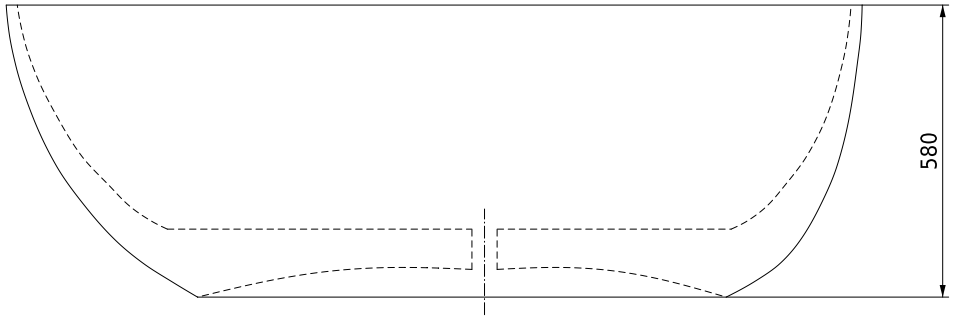

FRONT ELEVATION

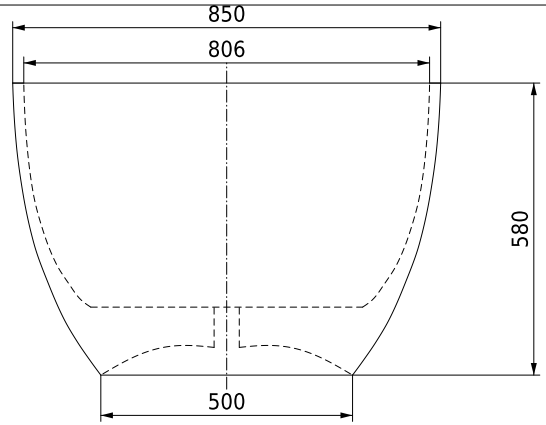

END ELEVATION

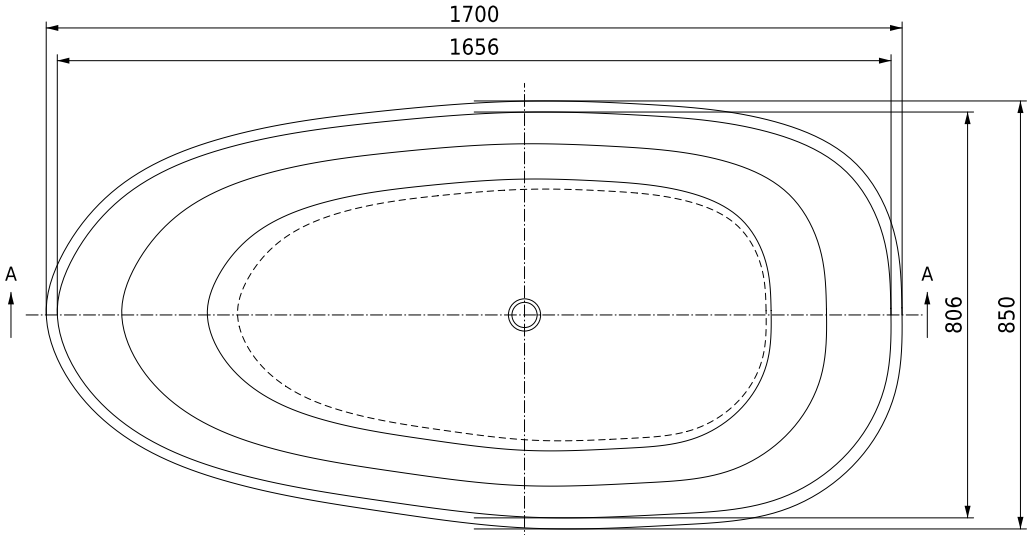

TOP VIEW

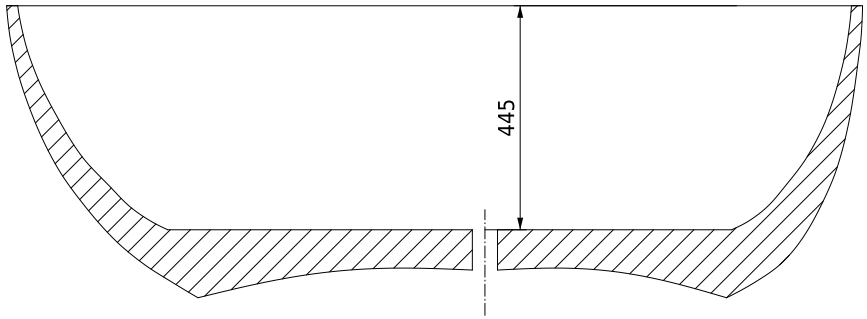

LONGITUDINAL SECTION A-A

GENERAL NOTES

1. Dimensions in mm. Do not scale.
2. No overflow opening or overflow passage.
3. Drain position and bore are indicative.
4. Base length / profiles reconstructed from images.
5. Verify geometry before tooling or production.

HANKIN VIETNAM | PRODUCT DRAWING

PRODUCT	PRODUCT CODE	REVISION
OVAL BATHTUB	HK-A-S171	01
SIZE (mm)	SCALE	SHEET
1700 x 850 x 580	1:15	1 / 1
MATERIAL	STATUS	UNITS
SOLID SURFACE	REFERENCE	mm